DRUTEX
WINDOWS DOORS SHUTTERS GATES

TAMIZ | ALUMINIUM CASEMENT SHUTTER

Aluminium external shutters combine modern functionality with timeless aesthetics. They provide effective protection against excessive sunlight and the build-up of heat inside the building, while allowing to regulate the amount of light entering the room and ensuring privacy. Thanks to a wide range of finish options, they blend in perfectly with the building's architecture, emphasising its style and giving the façade a unique character.

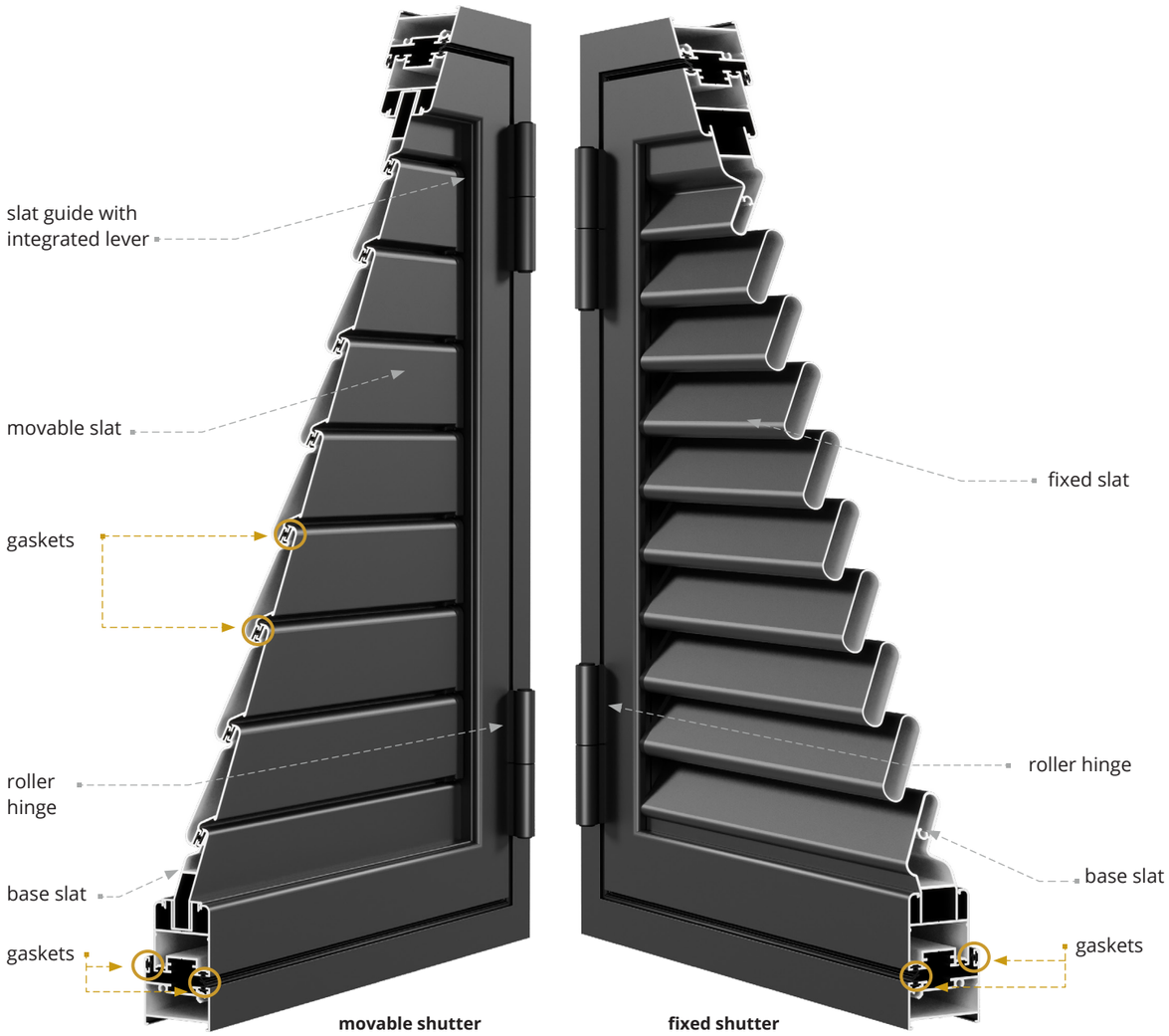

movable shutter **fixed shutter**

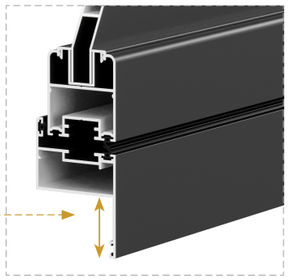

RENOVATION FRAME
30 mm

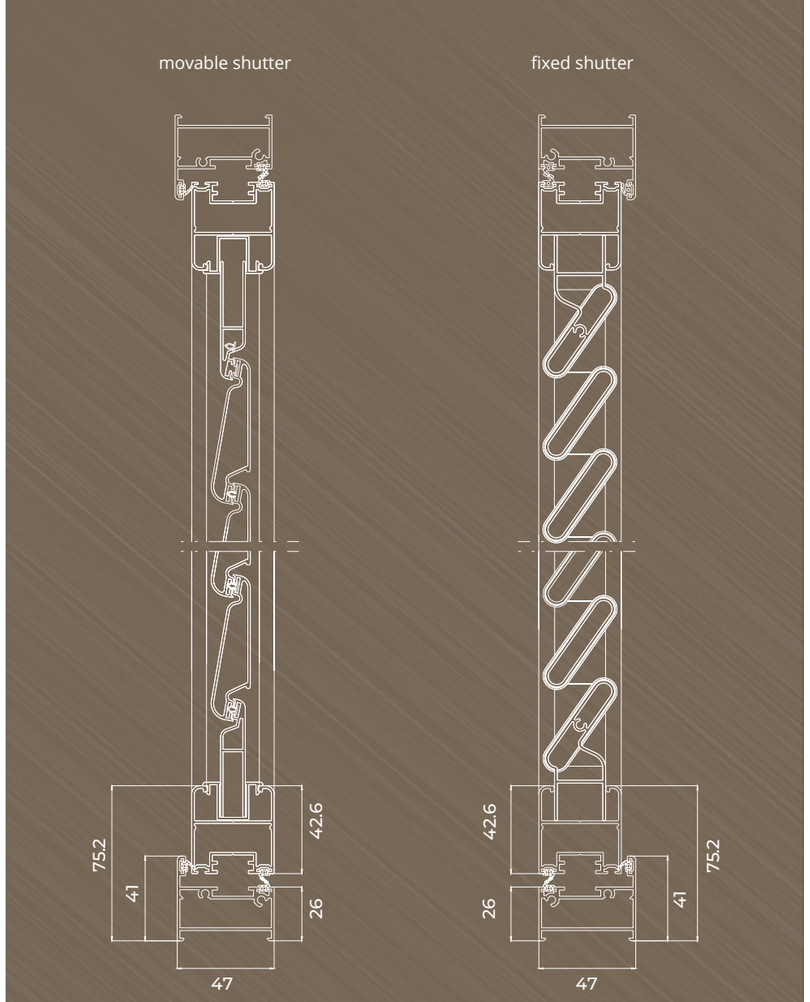

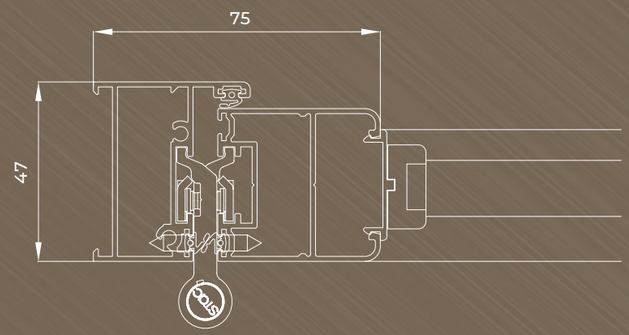

- a wide range of ral colours
- installation depth 47 mm
- sash depth 40 mm
- sturdy extruded aluminium profile
- two types of frame: standard and renovation
- two types of slats: fixed and movable with integrated steering
- shutters fitted with roller hinges
- closing with a handle; a version with a key is also available
- the option to fit an anti-snap catch
- the requirement to use a mullion from a height of 1950 mm, when using a movable slat
- the option to use additional mullions

TAMIZ

CASEMENT
type

slat opening angle

35° | **0°- 90°**

fixed / movable

47
installation depth
/ mm /

1500
max. shutter width
/ mm /

2500
max. shutter height
/ mm /

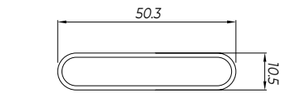

fixed

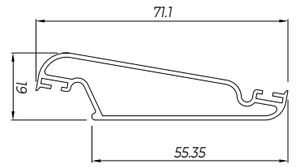

movable

slats